ES 665 · ADVANCED TRANSPORTATION ELECTRIFICATION TECHNOLOGY

Project Presentation

Road-Condition-Aware EV Range Prediction

Leveraging LSTM Networks and Topographical Data for Energy Consumption inclusive of Regenerative Energy in EV’s

Team Members:-

- **Shriniket Behera(23110306)**
- **Parth Dembla (23110234)**

Instructor:-

- **Prof. Pallavi Bharadwaj**

PROBLEM STATEMENT

Why Conventional SOC Methods Fall Short

Current State

•EV range estimation is primarily based on **State of Charge (SOC)** and **average energy consumption**.

•Real-world factors such as **traffic density, road type, and elevation** are not explicitly modeled

The Gap

- SOC-based estimators **cannot dynamically account for regenerative energy recovery**.[2]
- Road-dependent effects (urban stop-go vs highway vs downhill) are **ignored.**
- Lack of **real-time adaptation** leads to mismatch between predicted and actual range.

$$\text{Range (km)} = \frac{\text{Current SOC} \times \text{Usable Battery Capacity (kWh)}}{\text{Average Energy Consumption Rate (kWh/km)}}$$

The Indian Scenario

India's diverse terrain — steep ghats, unpredictable urban elevations, and sparse charging infrastructure — creates severe range anxiety that standard navigation tools simply cannot address.

MOTIVATION

The above limitation motivates to inculcate data driven approach !

•**The Missing Link:** While multiple pattern learning and range estimation methods exist, they often rely on purely mathematical or static physics-based formulas. [1] [3]

•**The Regen Factor:** Crucially, almost no existing commercial models take into account the dynamic energy recovered through **regenerative braking** on varying slopes and driving pattern recognition improves range prediction accuracy [4]

•**Our Solution:** A custom pipeline combining real-world driving data with live mapping APIs

•**Interactive Deployment:** Built a UI to demonstrate how our model dynamically predicts net energy by actively factoring in this regenerative potential.

Expected Impact

More **accurate, dynamic range** prediction improving **driver confidence** and **enabling energy-efficient routing decisions**, It can also help the industries to optimize placement of EV chargers in an area.

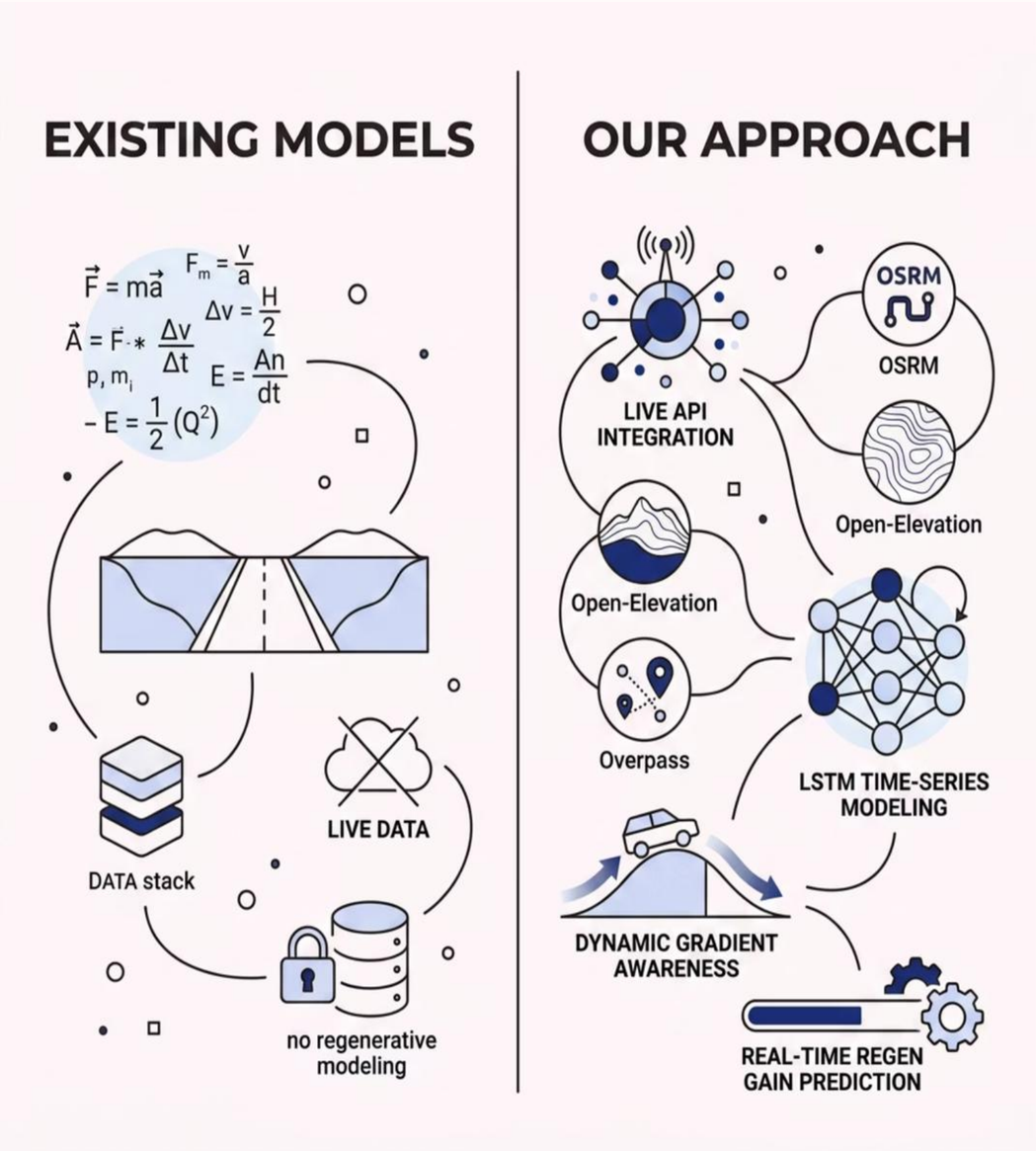

DATA ENGINEERING

Dataset Identification and Preprocessing

Source: Extended Vehicle Energy Dataset [5]

•**eVED Dataset** contains real-world, time-series EV driving data including speed, acceleration, GPS, and energy usage.

We isolated the "Pure EV" subset from the EvED dataset, filtering out hybrid and ICE vehicle records to ensure domain-specific model training.

Preprocessing

- Cleaning noisy real-world sensor logs and GPS traces
- Structuring sequential windows for LSTM-compatible input

Selected Input Features

1. **Speed**
2. **Speed Limit**
3. **Gradient**
4. **Elevation**

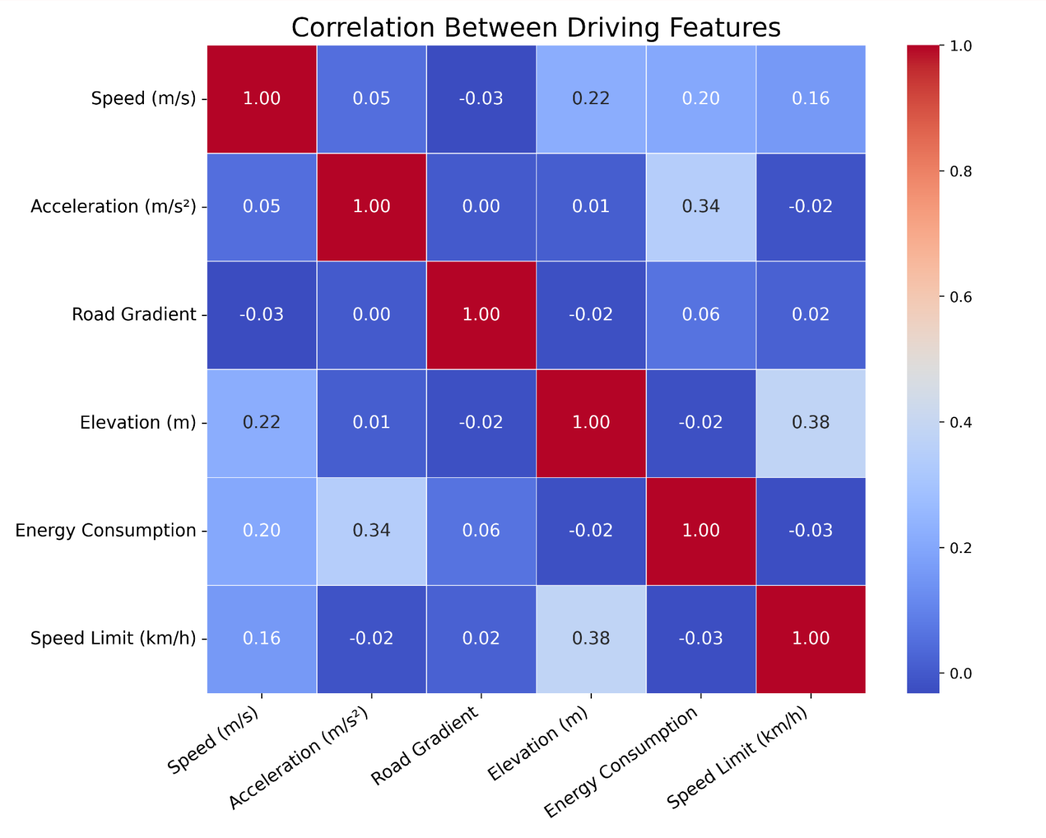

Fig. 1: Correlation matrix of selected driving features used.

LSTM Architecture: Capturing Sequential Dependencies

Why LSTM?

Long Short-Term Memory networks excel at modeling time-series dependencies --- critical for capturing how road gradient, speed, and elevation interact across a route segment.

Implementation

- **Input Layer:** Time-series sequence of selected driving features for 100 distance segments of 1 m each

- **LSTM Layers:**
  - 3 stacked LSTM layers
  - **256 hidden units**
  - **Dropout = 0.3** to reduce overfitting

- **Fully Connected Layers**:
  - Linear layer 1: **256 → 128 neurons**
  - Linear layer 2: **128 → 64 neurons**
  - ReLU activation
  - Output layer: **64→ 1 neuron**

The Trained Model gave us an **R2 Score** of 0.86

i.e. 86% accuracy

!! THIS RESULT CAN BE IMPROVED FURTHER!!

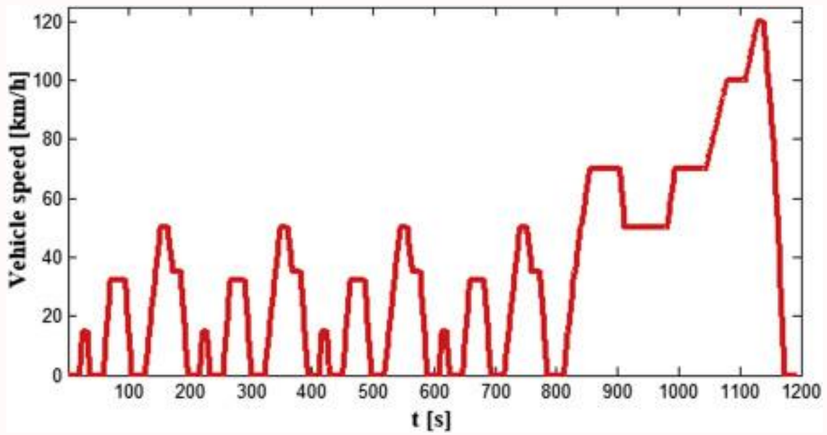

Fig. 2: Standard Time Series Graph for Drive Cycle
https://www.sciencedirect.com/topics/engineering/driving-cycle

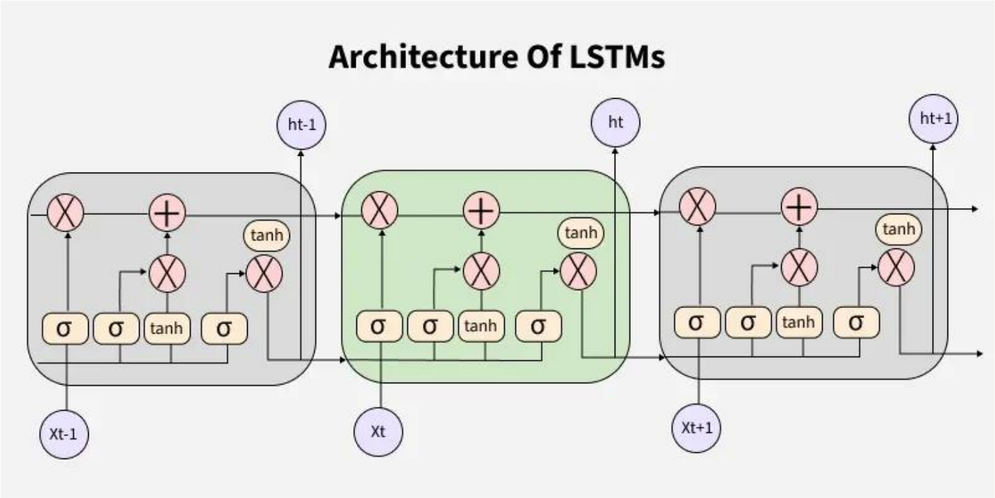

Fig.3: LSTM Architecture
https://media.geeksforgeeks.org/wp-content/uploads/20250528172141936296/architecture_of_lstms.webp

Calling API’s to Test and Integrate with Our Model !!

Speed (m/s)

Real-time velocity mapped from OSRM routing data, normalized for sequential input.

Gradient (Rise/Run)

Derived from Open-Elevation API — the primary driver of regenerative braking potential.

Speed Limit

Overpass API annotations provide legal speed constraints per road segment.

Elevation Smoothed

Raw elevation data smoothed to reduce sensor noise while preserving terrain features.

Scaling Protocol: Standard scaling fitted strictly on training data only to prevent data leakage and ensure real-world generalization.

Methodology: Machine Learning Approach

- Data Collection & Preprocessing
- LSTM Model for training spatial features with selected input attributes
- Calling API’s (right now using FREE API’s) for getting real world data
- Integrating Everything into a GUI Web Application to give effective range

Regenerative Energy Calculation and GUI Web Application

Trained LSTM Model + API for integration

- The model is trained to Calculate Energy Consumption for 100 window segments (each of 1m) {1Km Data}
- For Downhill slopes , Energy Consumed is negative(indicating regenerative braking) and for uphill or flat region; Energy Consumed is positive

Calculation of Energy

- The Initial Energy will be calculated using SOC and Battery Capacity.
- In subsequent segment the predicted consumed energy will be subtracted.
- Simultaneously , with each subtraction , new SOC will be calculated
- If the calculated SOC is less than 0 , it means the vehicle can't go further and it will give the range uptill then

GUI Web Application

- The Interactive Web Application takes Source , Destination and Initial SOC as the input
- It uses the trained model+API's
- It Shows segments with red and green color for non regen and regen regions respectively
- It has two modes ; Fast and ECO Mode
- The Fast mode tells the fastest route , and Eco Mode gives the range optimized routing

⚡ Fast Mode

Time-optimized routing. Prioritizes shortest travel duration using standard OSRM shortest-path algorithms.

🌿 Eco Mode

Range-optimized routing. Actively seeks downhill gradients and regenerative opportunities to extend battery life and reduce charging stops.

Applications of the Proposed Approach

By simulating routes and predicting the exact geographical coordinates where battery SOC reaches 0%, the model identifies **critical exhaustion points** across Indian highways and urban corridors.

Data-Driven Infrastructure Planning

Provides municipal and private operators with high-value, evidence-based recommendations for charger deployment — exactly where the grid is needed most.

Scalable to National Deployment

The pipeline generalizes to any mapped region, making it directly applicable to India's National Electric Mobility Mission Plan (NEMMP) goals.

Technical Milestones Achieved

- Fully functional **API backend** with live API integration
- Approximate elevation tracking via Open-Elevation API
- Successfully trained and validated LSTM model on eVED Pure EV data
- End-to-end GUI routing simulation with dual-mode switching

This project delivers a production-ready, topography-aware EV range prediction pipeline — purpose-built for India's unique driving environment and directly aligned with national electrification goals.

THANK YOU !

QNA

References:-

[1]H. Wei, X. Wang, and Y. Li, “Online estimation of driving range for battery electric vehicles based on energy consumption modeling,” *Energy Reports*, vol. 8, pp. 1206–1217, 2022.

[2] J. Kropiwnicki and T. Gawłas, *“Energy efficiency of a car driving with regenerative braking,” Combustion Engines*, vol. 202, no. 3, pp. 20–26, 2025, doi:10.19206/CE-207152

[3] Artificial intelligence and machine learning in optimizing EV powertrains,” *Electronics*, vol. 12, no. 2, 2023, doi: 10.3390/electronics12020445.

[4] H. Yu, F. Tseng, and R. McGee, “Driving pattern identification for EV range estimation,” *IEEE Trans. Vehicular Technology*, vol. 60, no. 7, pp. 3003–3015, Sep. 2011

[5] H. C. Oh, D. J. Leblanc and H. Peng, “**Vehicle Energy Dataset (VED), a Large-Scale Dataset for Vehicle Energy Consumption Research**,” *IEEE Transactions on Intelligent Transportation Systems*, vol. 23, no. 4, pp. 3302–3312, Apr. 2022, doi: 10.1109/TITS.2020.3035596.

For Reviewing Code Files

Scan the QR Code or Click Here